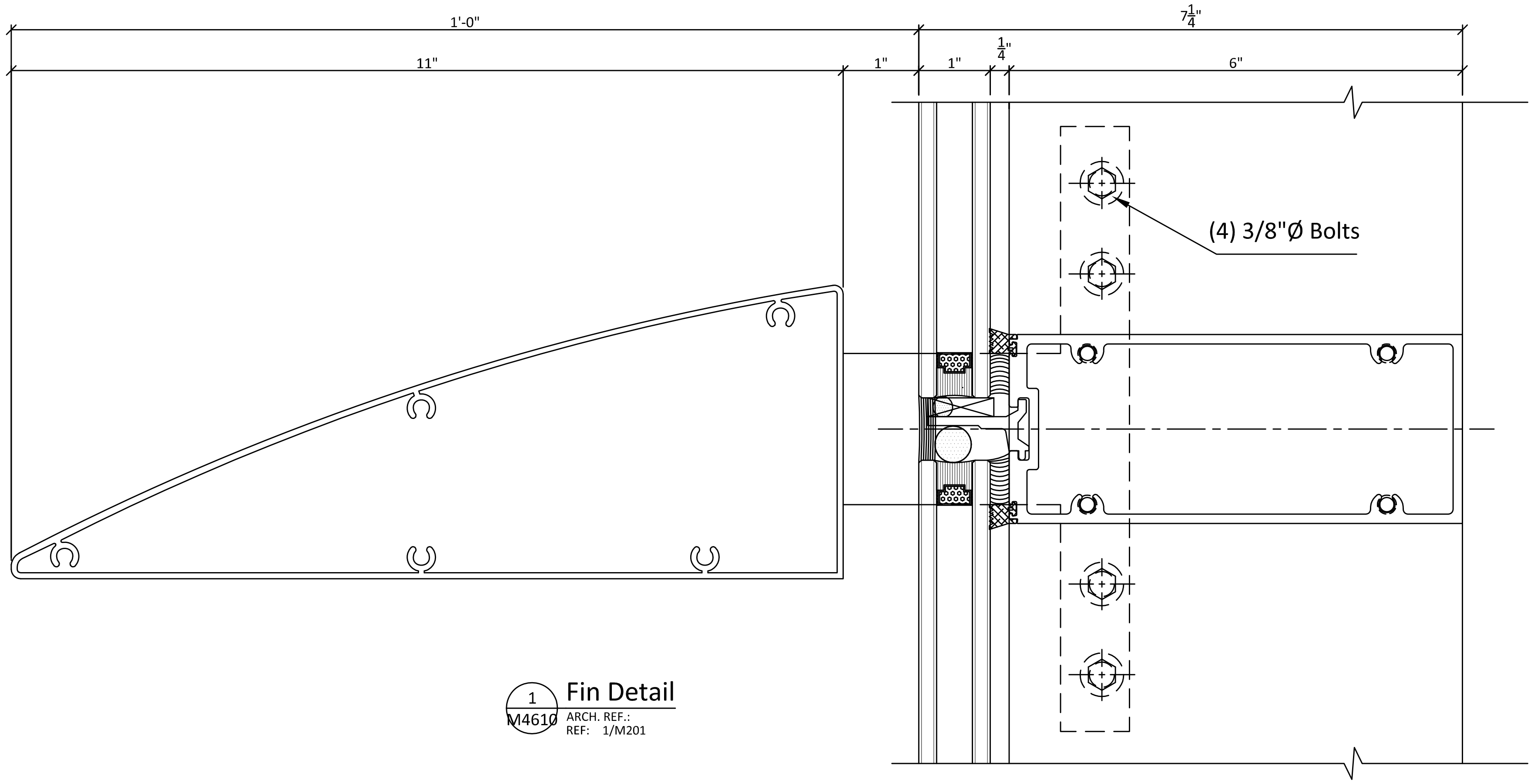

1 / M4610 **Fin Detail**
ARCH. REF.:
REF: 1/M201

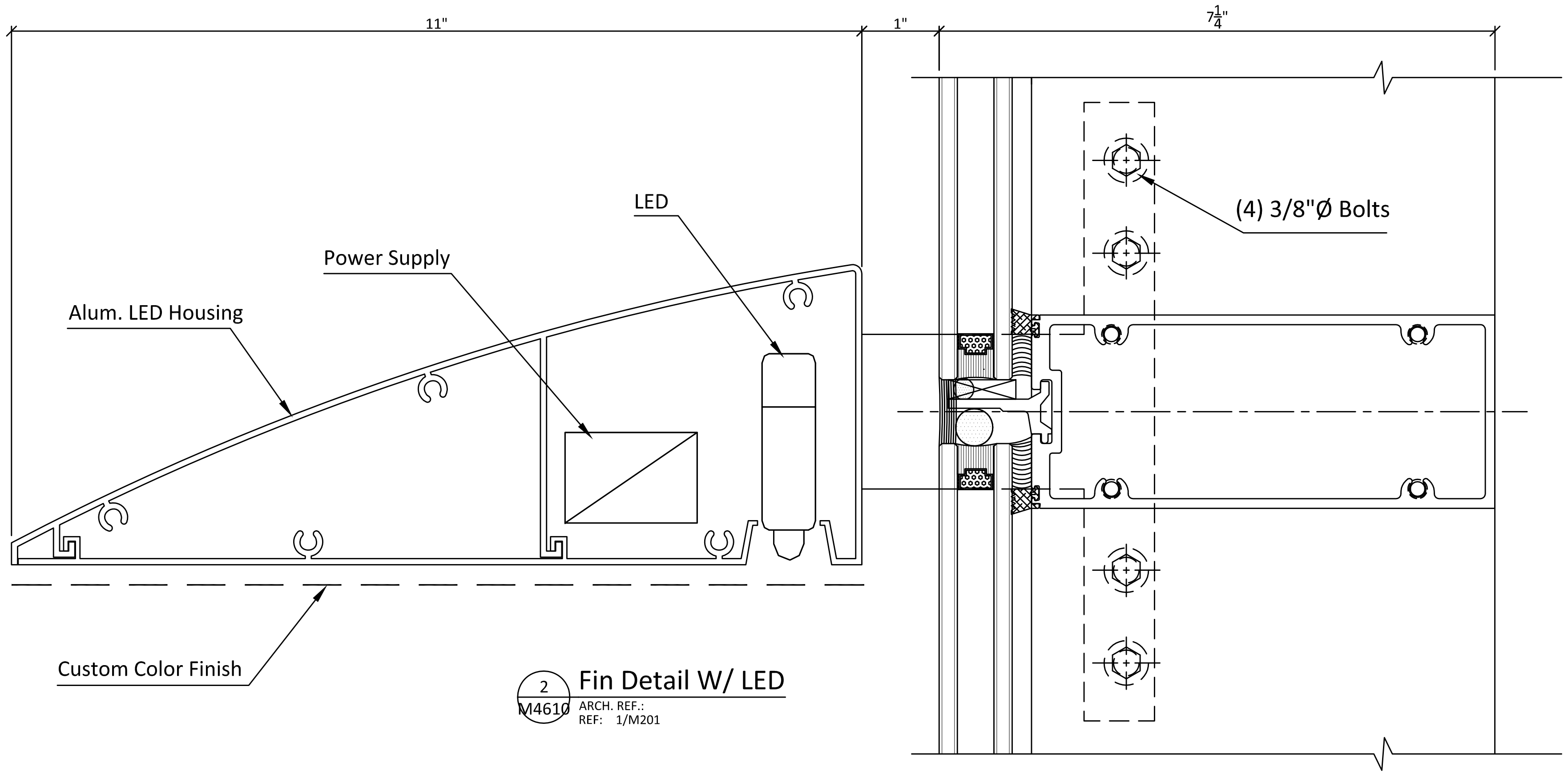

2 / M4610 **Fin Detail W/ LED**
ARCH. REF.:
REF: 1/M201

Related Wall Systems

USA
Business: (+1) 321-396 5247
Fax: (+1) 212-202 6002

info@relatedwalls.com
www.relatedwalls.com

CHINA
Office: (86) 10- 59670402 ext-107
Fax: (86) 10- 59760407

Address: Room701, Nexus Center
19A East 3rd Ring Road,
Chaoyang District,
Beijing, China 100020

This document and the disclosures therein are submitted with the mutual understanding and agreement that the recipient will not disclose the same to others, nor reproduce nor manufacture using this document or the information contained therein without prior writen authorization by RELATED WALL SYSTEMS and further that all rights to this document details therein are the exclusive and confidential property of RELATED WALL SYSTEMS.

RELATED WALL SYSTEMS will not be responsible for any errors and or work that occurs from the use of these drawings by other trades.

CHANGE INFORMATION

NO.	CHANGE CONTENT	DATE	BY	CHKD.

PROJECT NAME
CURTAIN WALL

May 25, 2010

SHEET TITLE
FIN DETAIL

DRAWN BY:	SHEET # M4610 (Office)
CHECKED BY:	
AUTHORIZED:	DATE:
SCALE:	REV.NO.:

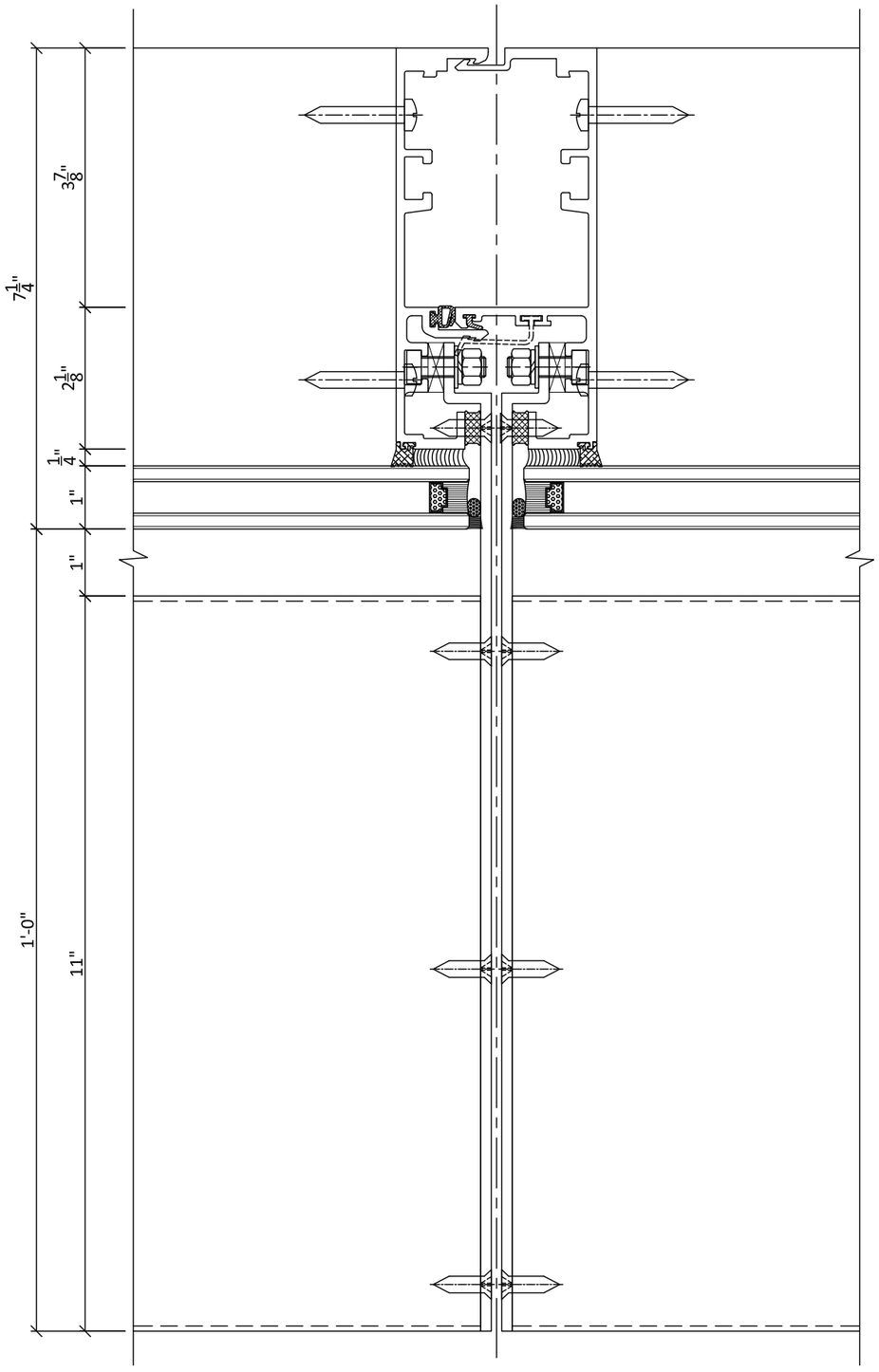

1 M4611 Fin Detail
ARCH. REF.:
REF: 1/M201

Related Wall Systems

USA
Business: (+1) 321-396 5247
Fax: (+1) 212-202 6002

info@relatedwalls.com
www.relatedwalls.com

CHINA
Office: (86) 10- 59670402 ext-107
Fax: (86) 10- 59760407

Address: Room701, Nexus Center
19A East 3rd Ring Road,
Chaoyang District,
Beijing, China 100020

This document and the disclosures therein are submitted with the mutual understanding and agreement that the recipient will not disclose the same to others, nor reproduce nor manufacture using this document or the information contained therein without prior writen authorization by RELATED WALL SYSTEMS and further that all rights to this document details therein are the exclusive and confidential property of RELATED WALL SYSTEMS.

RELATED WALL SYSTEMS will not be responsible for any errors and or work that occurs from the use of these drawings by other trades.

CHANGE INFORMATION

NO.	CHANGE CONTENT	DATE	BY	CHKD.

PROJECT NAME
CURTAIN WALL

May 25, 2010

SHEET TITLE
FIN DETAIL

DRAWN BY:	SHEET # M4611 (Office)
CHECKED BY:	
AUTHORIZED:	DATE:
SCALE:	REV.NO.: